TrynEx International, LLC, 531 Ajax Drive, Madison Heights, MI 48071-2429 • www.snowexproducts.com

October 15, 2026
Lit. No. 52532, Rev. 04

SnowEx®

Automatixx®
ATTACHMENT SYSTEM

7600, 8000

Regular Duty Snowplow

Blade Assembly 77710, 77715
Big Box Assembly 77810

Parts List

AUTHENTIC SnowEx® PARTS & ACCESSORIES

A DIVISION OF DOUGLAS DYNAMICS, LLC

TABLE OF CONTENTS

REGULAR DUTY BLADE ASSEMBLY 4

A-FRAME AND HEADGEAR ASSEMBLY 6

A-Frame Components 6

Headgear Components 8

HYDRAULIC AND ELECTRICAL COMPONENTS 10

Hydraulic Unit Components 10

Lift and Angle Rams 12

Hoses and Fittings 12

Electrical Components 13

VEHICLE-SIDE HARNESS DIAGRAM 14

HEADLAMPS 15

Blade Components

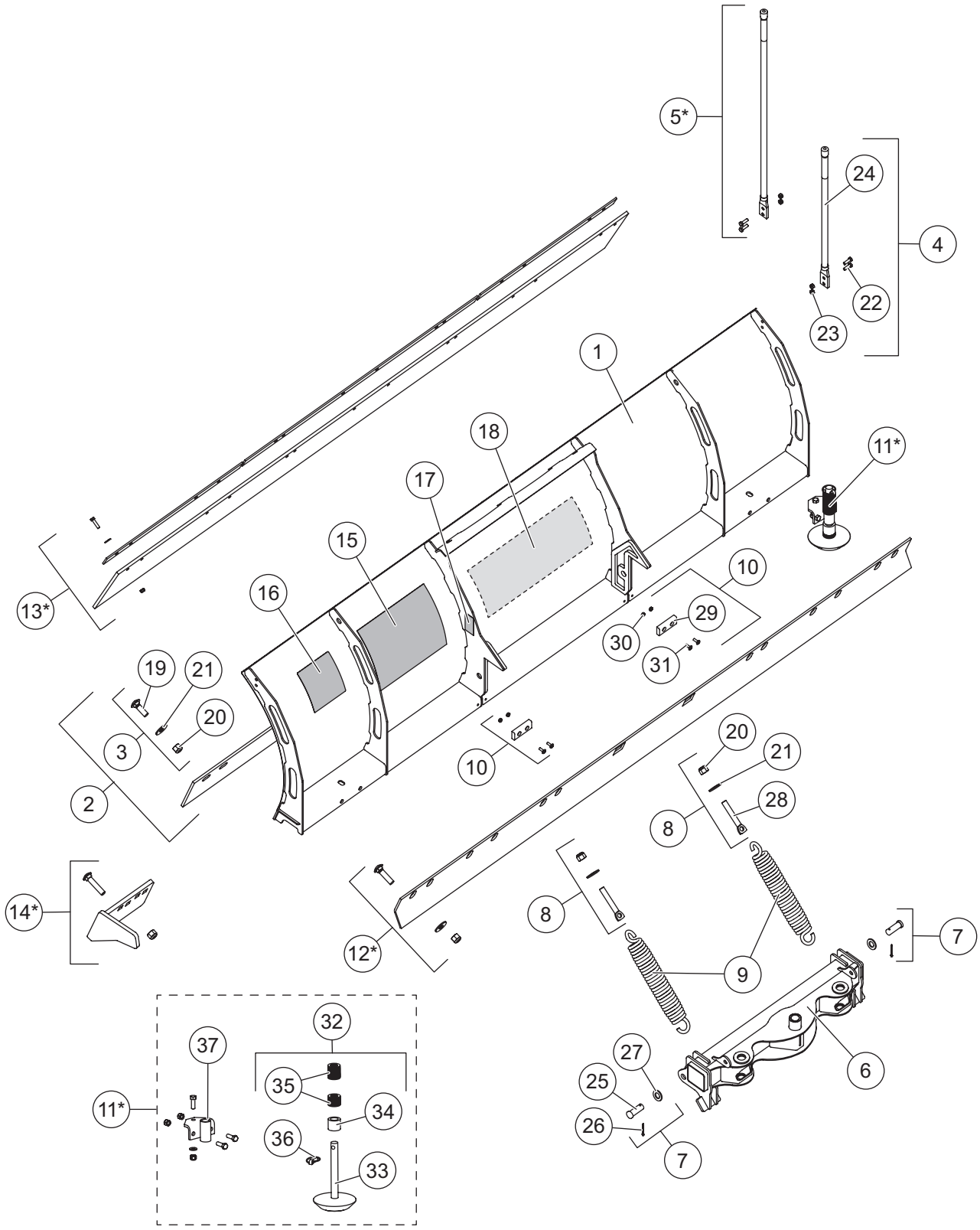

REGULAR DUTY BLADE ASSEMBLY

77710/77715 Blade Components							
Item	**Part**	**Qty**	**Description**	**Item**	**Part**	**Qty**	**Description**
1	84557	1	7600RD Blade w/ Labels	9	23039	2	Trip Spring
	84558	1	8000RD Blade w/ Labels	10	63976	2	Push Stop Kit
2	84445	1	5/16 Cutting Edge Kit – 7600RD	11*	84506	1	Shoe Assembly Kit – HD, RD, LT
	84467	1	5/16 Cutting Edge Kit – 8000RD	12*	84463	1	Back Drag Edge – 7'6"
ns*	42417	1	3/8 Cutting Edge Kit – 7600RD		84464	1	Back Drag Edge – 8'
	40552	1	3/8 Cutting Edge Kit – 8000RD	13*	84514	1	Rubber Deflector Kit – 7'6"
ns*	40695	1	1/2 Cutting Edge Kit – 7600RD		84517	1	Rubber Deflector Kit – 8'
	40696	1	1/2 Cutting Edge Kit – 8000RD	14*	43885	1	Curb Guard Kit
3	69425	1	Cutting Edge Kit Bolt Bag	15	52203	1	Label – Attach/Detach, Automatixx®
4	84525	1	24" Blade Guide Kit	16	59900	1	Label – Warning/Caution, Snowplows
5*	84477	1	36" Poly Blade Guide Kit	17	29256	2	Label – Warning, Foot Crush
6	84574	1	Quadrant – RD	18	77702	1	Label – Logo, RD Blade Center
7	84631	2	3/4 x 2 Clevis Pin Kit w/Cotter	ns	84641	1	Blade Label Kit – RD
8	84702	2	Eyebolt Kit				
Item 2			**84445/84467 5/16 Cutting Edge Kit**				
		1	5/16 Steel Cutting Edge	3	69425	1	Cutting Edge Kit Bolt Bag
Item 3			**69425 Cutting Edge Kit Bolt Bag**				
19		10	5/8-11 x 2 Carriage Bolt G5	21	90576	10	5/8 Hardened Flat Washer
20		10	5/8-11 Hex Locknut GB				
Item 4			**84525 24" Blade Guide Kit**				
22		4	5/16-18 x 1 Hex Cap Screw G5	24		2	24" Poly Blade Guide w/ Label
23		4	5/16-18 Hex Locknut GB				
Item 7			**84631 3/4 x 2 Clevis Pin Kit w/Cotter**				
25		1	3/4 x 2 Clevis Pin	27		1	3/4 Flat Washer
26		1	5/32 x 1-1/2 Cotter Pin				
Item 8			**84702 Eyebolt Kit**				
20		1	5/8-11 Hex Locknut GB	28		1	5/8-11 x 4 Eyebolt
21		1	5/8 Hardened Flat Washer				
Item 10			**63976 Push Stop Kit**				
29		1	Bumper	31		2	1/4-20 x 3/4 Button Cap Screw w/Flange Hex Socket
30		2	1/4-20 Hex Locknut				
Item 11*			**84506 Shoe Assembly Kit**				
32	42301	2	Disc Shoe Assembly	36	93010	2	7/16 x 1-3/4 Linchpin
33	60217	2	Disc Shoe	37	84736	2	Shoe Bracket
34	60045	2	Spacer	ns	84732	1	Bolt Bag
35	91192	52	Round Flat Washer, Special				
			84641 Blade Label Kit – RD				
15	52203	1	Label – Attach/Detach, Automatixx	17	29256	1	Label – Warning, Foot Crush
16	59900	1	Label – Warning/Caution, Snowplows	18	77702	1	Label – Logo, RD Blade Center
			ns = not shown				G = Grade

* Accessory only.

A- Frame Components

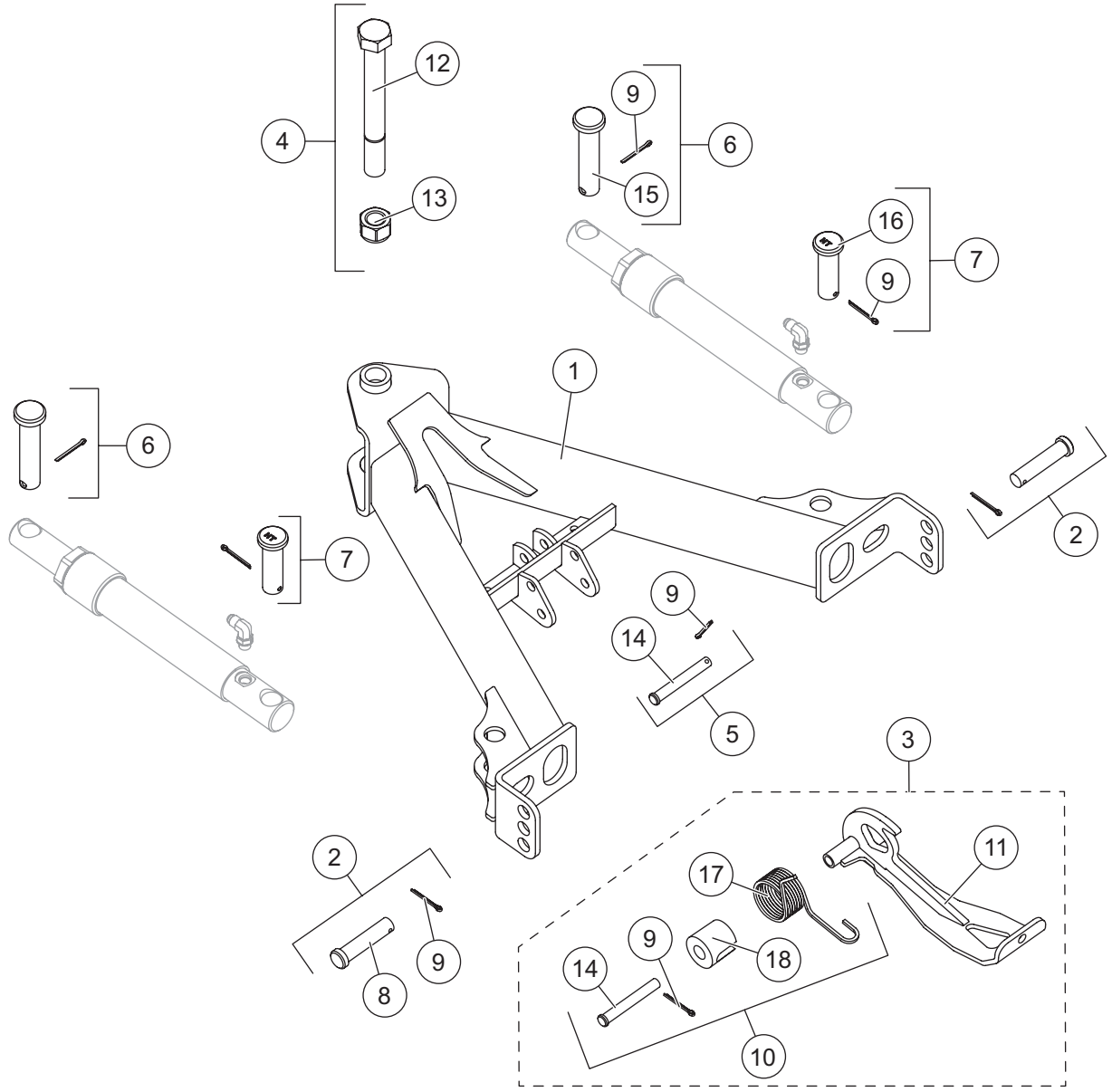

A-FRAME ASSEMBLY

A-Frame Components							
Item	**Part**	**Qty**	**Description**	**Item**	**Part**	**Qty**	**Description**
1	84588	1	A-Frame – RD	6	84633	2	1 x 4-3/4 Clevis Pin Kit – Angle Ram Rod End
2	84618	2	A-Frame Pin Kit				
3	84593	1	Stand Kit	7	84634	2	1 x 3-1/4 Clevis Pin Kit – Angle Ram Base End
4	69494	1	Pivot Bolt Kit				
5	83629	1	1/2 x 3-11/16 Clevis Pin Kit w/Cotter				
Item 2			**84618 A-Frame Pin Kit**				
8		1	3/4 x 3-1/4 Clevis Pin	9		1	5/32 x 1-1/2 Cotter Pin
Item 3			**84593 Stand Kit**				
10	84615	1	Stand Hardware Kit	11		1	Stand
Item 4			**69494 Pivot Bolt Kit**				
12		1	1-8 x 9 Hex Cap Screw Special G5	13		1	1-8 Locknut GB
Item 5			**83629 1/2 x 3-11/16 Clevis Pin Kit**				
9		1	5/32 x 1-1/2 Cotter Pin	14		1	1/2 x 3-11/16 Clevis Pin
Item 6			**84633 1 x 4-3/4 Clevis Pin Kit – Angle Ram Rod End**				
9		1	5/32 x 1-1/2 Cotter Pin	15		1	1 x 4-3/4 Clevis Pin
Item 7			**84634 1 x 3-1/4 Clevis Pin Kit – Angle Ram Base End**				
9		1	5/32 x 1-1/2 Cotter Pin	16		1	1 x 3-1/4 Clevis Pin G5
Item 10			**84615 Stand Hardware Kit**				
9		1	5/32 x 1-1/2 Cotter Pin	17		1	Stand Torsion Spring
14		1	1/2 x 3-11/16 Clevis Pin	18		1	Stand Spring Spacer
G = Grade							

Headgear Components

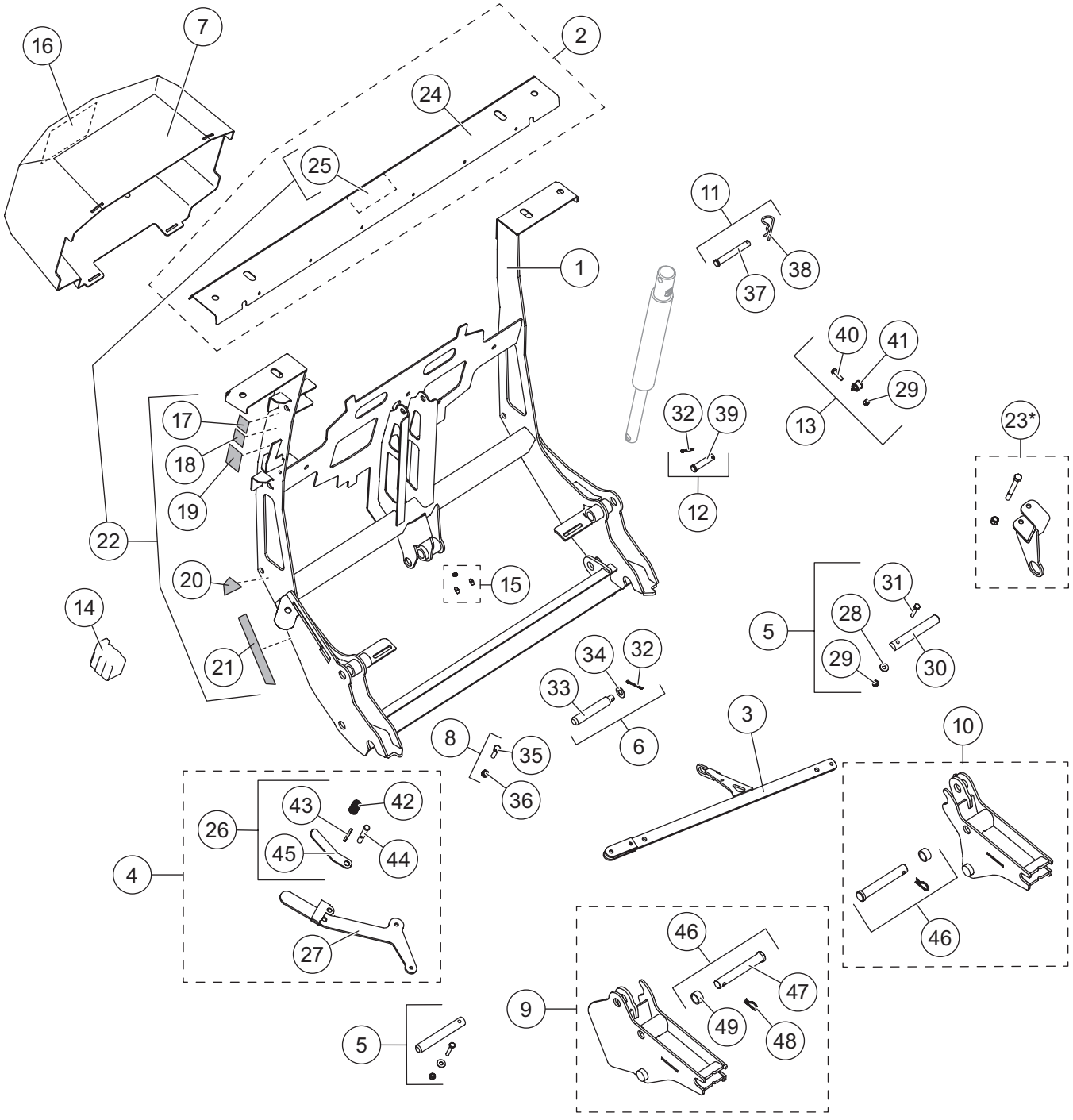

*** For use only on headgear without a welded reinforcement gusset for the stand pin bushing.**

HEADGEAR ASSEMBLY

Headgear Components							
Item	**Part**	**Qty**	**Description**	**Item**	**Part**	**Qty**	**Description**
1	84620	1	Headgear – RD (incl. item 15)	13	84778	1	Power Cable Clamp Loop Kit
2	84619	1	Light Bar Channel – RD	14	61246	1	Cable Boot
3	84598	1	Link Arm – RD	15	84616	1	Grease Zerk (pkg of 3)
4	84794	1	Attach Handle Kit – RD	16	43859	1	Label – Hydraulic Info, Straight Blade
5	84603	2	Attach Pin Kit	17	52206	1	Label – Automatixx®, Power Switch
6	84601	1	Link Arm Jack Stand Pin Kit	18	52207	1	Label – Automatixx, Operation Switch
7	84648	1	Hydraulic Cover (incl. item 15)	19	69689	1	Label – Logo, SECURITY GUARD™
8	84635	1	Link Arm/Attach Handle Fastener Kit	20	77717	1	Label – Automatixx, Upper
9	84606	1	RD Receiver Kit, DS (incl. item 46)	21	77718	1	Label – Automatixx, Lower
10	84607	1	RD Receiver Kit, PS (incl. item 46)	22	84456	1	Headgear Label Kit – RD
11	85199	1	Lift Ram Base Pin Kit	23*	84790	–	Stand Pin Support Kit
12	84627	1	Lift Ram Rod Pin Kit				
Item 2			**84619 Light Bar Channel – RD**				
24		1	Light Bar	25	84553	1	Label – SnowEx® Light Bar, Center
Item 4			**84794 Attach Handle Kit – RD**				
26	84596	1	Attach Handle Release Cam Kit	27	84457	1	Handle
Item 5			**84603 Attach Pin Kit**				
28		1	1/4 Flat Washer	30		1	Hitch Pin
29		1	1/4-20 Hex Locknut GB	31		1	1/4-20 x 1-1/2 Hex Cap Screw SS
Item 6			**84601 Link Arm Jack Stand Pin Kit**				
32		1	5/32 x 1-1/2 Cotter Pin	34		1	1/2 Flat Washer Type B Narrow SS
33		1	Stand Actuator Pin				
Item 8			**84635 Link Arm/Attach Handle Fastener Kit**				
35		1	5/16-18 x 1-1/4 Hex Cap Screw G5	36		1	5/16-18 Hex Locknut GB
Item 11			**85199 Lift Ram Base Pin Kit**				
37		1	1/2 x 2-7/8 Clevis Pin	38		1	1/8 Hairpin Cotter
Item 12			**84627 Lift Ram Rod Pin Kit**				
32		1	5/32 x 1-1/2 Cotter Pin	39		1	1/2 x 2-1/8 Clevis Pin
Item 13			**84778 Power Cable Clamp Loop Kit**				
29		1	1/4-20 Hex Locknut GB	41	65340	1	#10 Clamp Loop
40		1	1/4-20 x 1 Hex Cap Screw G5				
Item 22			**84456 Headgear Label Kit – RD**				
17	52206	1	Label – Automatixx, Power Switch	20	77717	1	Label – Automatixx, Upper
18	52207	1	Label – Automatixx, Operation Switch	21	77718	1	Label – Automatixx, Lower
19	69689	1	Label – Logo, SECURITY GUARD	25	84553	1	Label – SnowEx Light Bar, Center
Item 26			**84596 Attach Handle Release Cam Kit**				
42		1	Stand Lock Pin Spring	44		1	Handle Lock Pin
43		1	3/16 x 1-3/8 Roll Pin SS	45		1	Handle Lock Pin Lever
Item 46			**84611 Receiver Pin Kit**				
47	95739	1	3/4 x 5 Clevis Pin HT	49	63211	1	Spacer
48	42142	1	R-Pin Cotter				
SS = Stainless Steel			HT = Heat Treated				G = Grade

* For use only on headgear without a welded reinforcement gusset for the stand pin bushing.

Hydraulic Unit Components

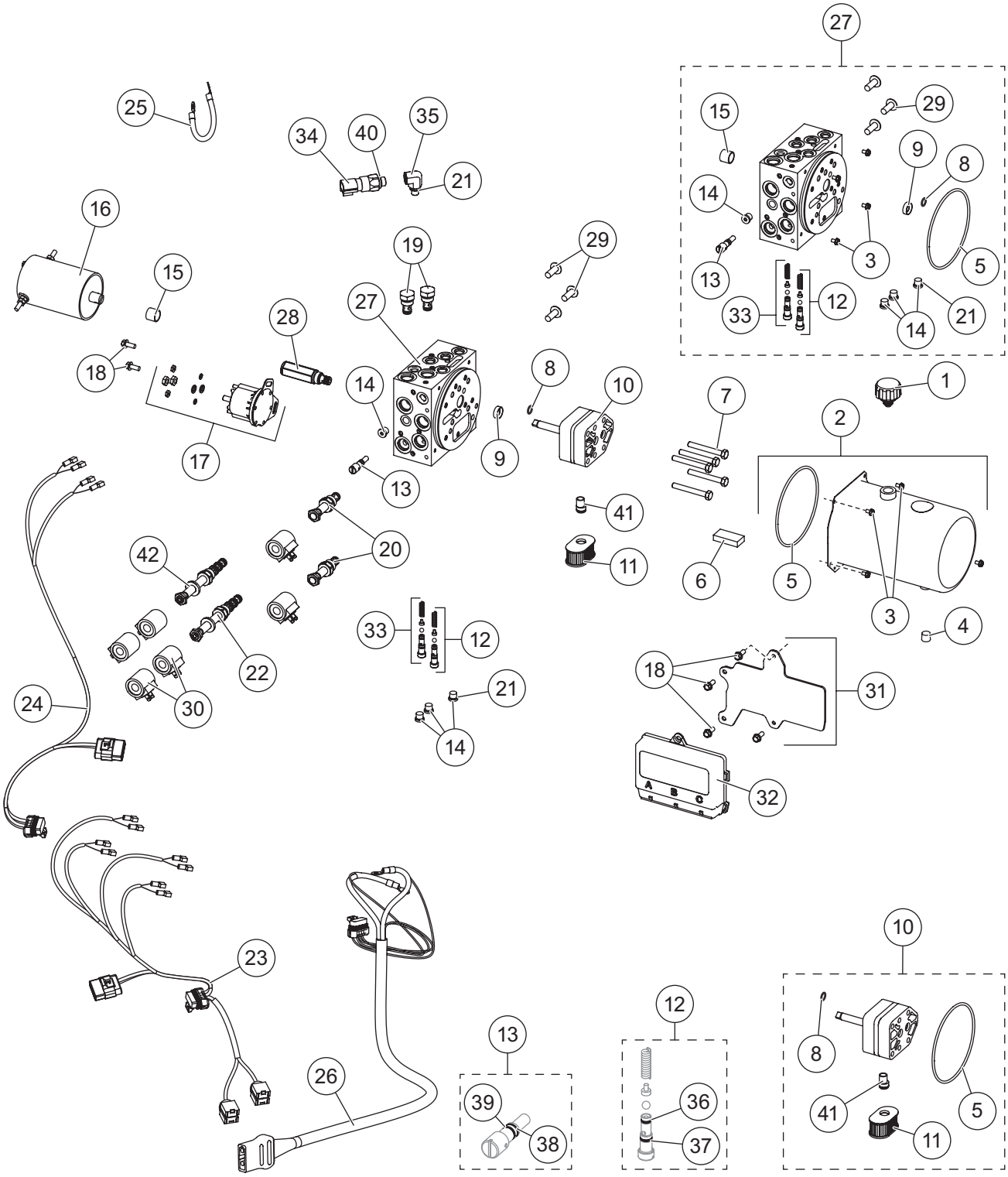

52649 Hydraulic Unit							
Item	**Part**	**Qty**	**Description**	**Item**	**Part**	**Qty**	**Description**
1	48278	1	Breather	22	52285	1	Valve, 4-Way, 3-Position Closed Center
2	52289	1	Reservoir Kit				
3	66607	4	#10-24 x 5/16 Machine Screw	23	52108	1	Plow Control Harness, 4-Coil
4	92079	1	Plug, Square 3/8 NPTF	24	52077	1	Plow Control Harness, 2-Coil
5	66519	1	O-Ring 2-250	25	29071	1	Vehicle Battery Cable 8"
6	73897	1	Magnet	26	52291	1	Snowplow Battery Cable
7	90073	5	5/16-18 x 2-1/4 Hex Cap Screw G5	27	52257	1	Manifold Assembly w/o Valves RD/LT
8	56274	1	O-Ring -013	28	42889	1	Relief Valve 4000 psi
9*	66515	1	Pump Shaft Seal	29	98043	3	3/8-16 x 1 Button Cap Screw
ns	52252	1	Seal Repair Tool Kit w/Seal	30	52294	6	Coil
10	52288	1	Hydraulic Pump Kit	31	52293-1	1	Plate, Module
11	48281	1	Filter	32	52292-2	1	Module, Plow Control
12	52282	1	Relief Valve (1 set)	33	52284	1	Relief Valve (1 set)
13	48517	1	Quill	34	84838	1	Pressure Switch
14	44344	4	Plug, Hex Socket –4 M ORB	35	52295	1	Elbow, 90° –4 M ORB/–6 F ORB
15†	56364	1	Bearing Sleeve	36	55371	2	O-Ring -008
ns	52251	1	Bearing Repair Tool Kit w/Bearing	37	25731	2	O-Ring -010
16	52299	1	Motor	38	48239	1	O-Ring -106
17	52290	1	Motor Relay Kit, FLEET FLEX	39	48240	1	Back-Up Ring -106
18	44355	6	1/4-20 x 5/8 Hex Washer-Head Thread-Rolling Screw	40	56569	5	O-Ring -906
				41	10887	1	Inlet Fitting
19	84934	2	Check Valve	42	84937	1	Valve, 4-Way, 3-Position
20	84936	2	Valve, 2-Way NC w/Rev Flow	ns		3	Fuse, 5A Mini Automotive-Style (for items 25 and 26)
21	44343	5	O-Ring -904				
Item 2			**52289 Reservoir Kit**				
3	66607	4	#10-24 x 5/16 Machine Screw	5	66519	1	O-Ring 2-250
4	92079	1	Plug, Square 3/8 NPTF				
Item 27			**52257 Manifold Assembly w/o Valves – RD/LT**				
3	66607	4	#10-24 x 5/16 Machine Screw	14	44344	4	Plug, Hex Socket –4 M ORB
5	66519	1	O-Ring 2-250	15	56364	1	Bearing Sleeve
8	56274	1	O-Ring -013	21	44343	4	O-Ring -904
9	66515	1	Pump Shaft Seal	29	98043	3	3/8-16 x 1 Button Cap Screw
12	52282	1	Relief Valve (1 set)	33	52284	1	Relief Valve (1 set)
13	48517	1	Quill				
O-Ring Service Kits							
–	52298-1	–	O-Ring Kit	–	48310	–	Seal Kit, 2-Way Valves
–	48309	–	Seal Kit, 3-Way & 4-Way Valves				
ns = not shown			F = Female	M = Male			G = Grade

* Use 52252 tool to install.

† Use 52251 tool to install.

Go to *www.snowexproducts.com* for hydraulic unit service information and specifications.

Lift and Angle Ram Components

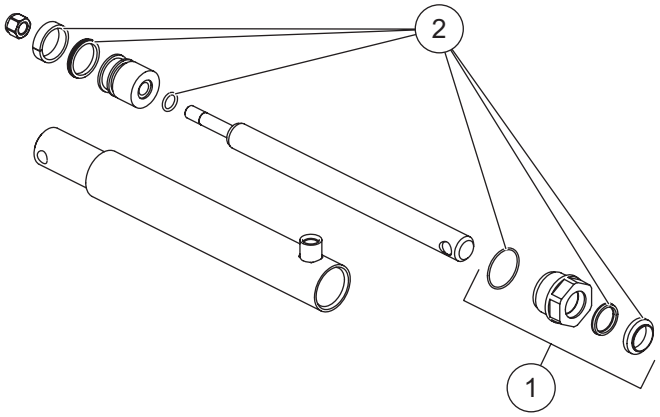

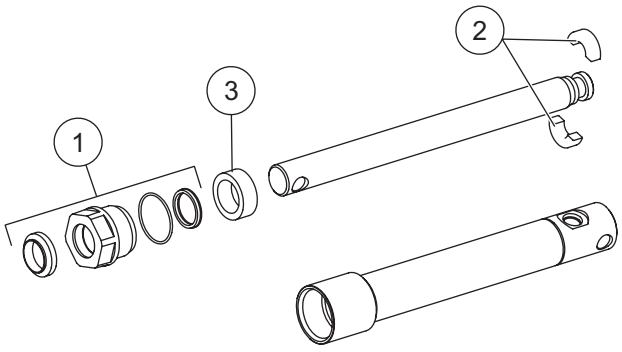

90920 Lift Ram Assembly 1-1/2 x 9 DA (Black) 84424* Lift Ram Assembly 1-1/2 x 9 DA (Red)			
Item	**Part**	**Qty**	**Description**
1	52277	1	Gland Nut Assembly
2	52302	1	Seal Kit 1-1/2 DA Ram

* Discontinued

100264 Angle Ram Assembly 1-1/2 x 8 (Black) 84427* Angle Ram Assembly 1-1/2 x 8 (Red)			
Item	**Part**	**Qty**	**Description**
1	48985	1	Gland Nut Assembly
2	57879	1	1-1/2 Split Bearing Kit
3	56537	1	Spacer

* Discontinued

Hoses and Fittings

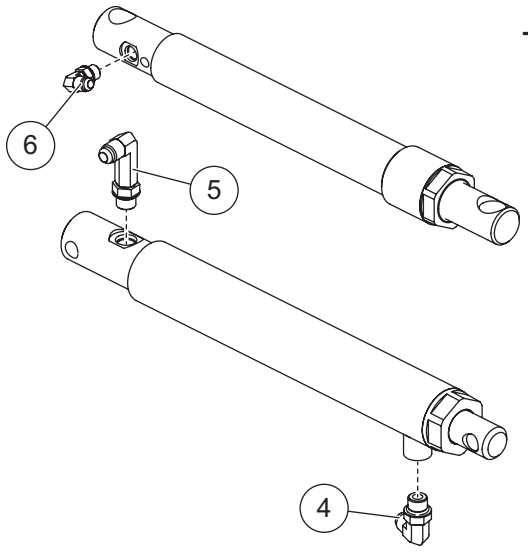

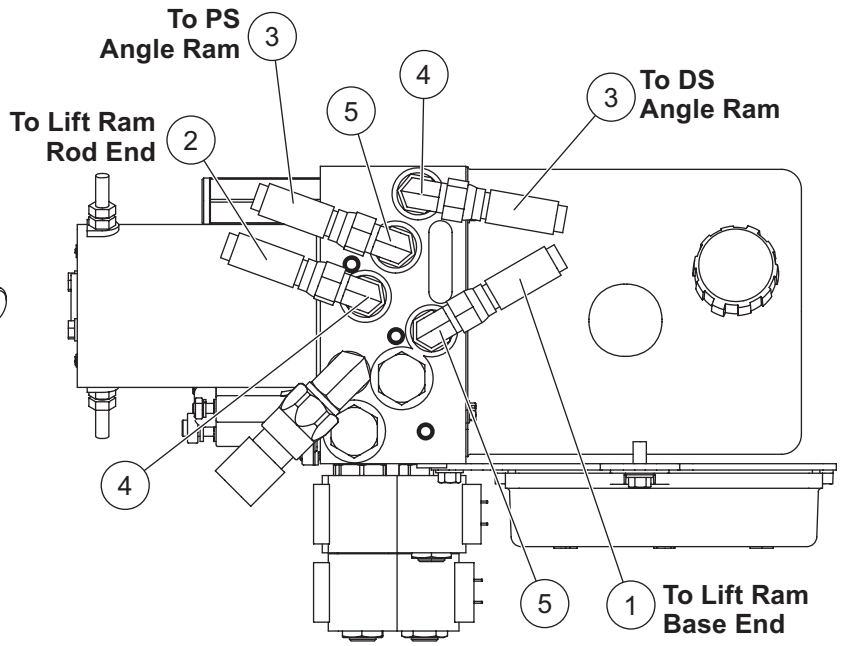

Hoses and Fittings							
Item	**Part**	**Qty**	**Description**	**Item**	**Part**	**Qty**	**Description**
1	84446	1	Hose, 1/4 x 14 w/F JIC Ends	5	40572	3	Elbow, Extra Long 90° –6M JIC/ –6 M ORB
2	40570	1	Hose, 1/4 x 22 w/F JIC Ends				
3	52304	2	Hose, 3/8 x 36 w/F JIC Ends	6	77929	1	Elbow, 90° –6 M JIC/–6 M ORB w/Screen
4	40571	4	Elbow, 90° –6 M JIC/–6 M ORB				
ns	56823	1	Hose Wrap				
F = Female				M = Male			ns = not shown

Electrical Components

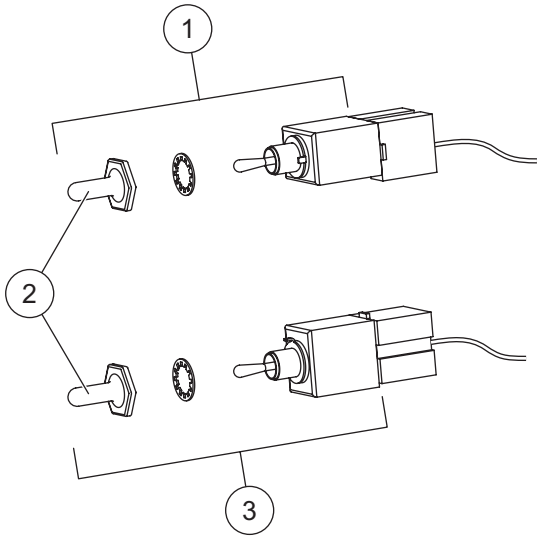

Plow-Side Electrical Components							
Item	**Part**	**Qty**	**Description**	**Item**	**Part**	**Qty**	**Description**
1	40575	1	Toggle Switch (MOM-ON, OFF, ON)	3	40576	1	Toggle Switch (MOM-ON, OFF, MOM-ON)
2	48259	2	Switch Boot				
Vehicle-Side Electrical Components							
*	72527	1	Vehicle Battery Cable	ns	48325	2	Plug Cover
*	28587	1	Vehicle Control Harness				
ns = not shown							

* For diagram see Vehicle-Side Harness Diagram.

Vehicle-Side Harness Diagram

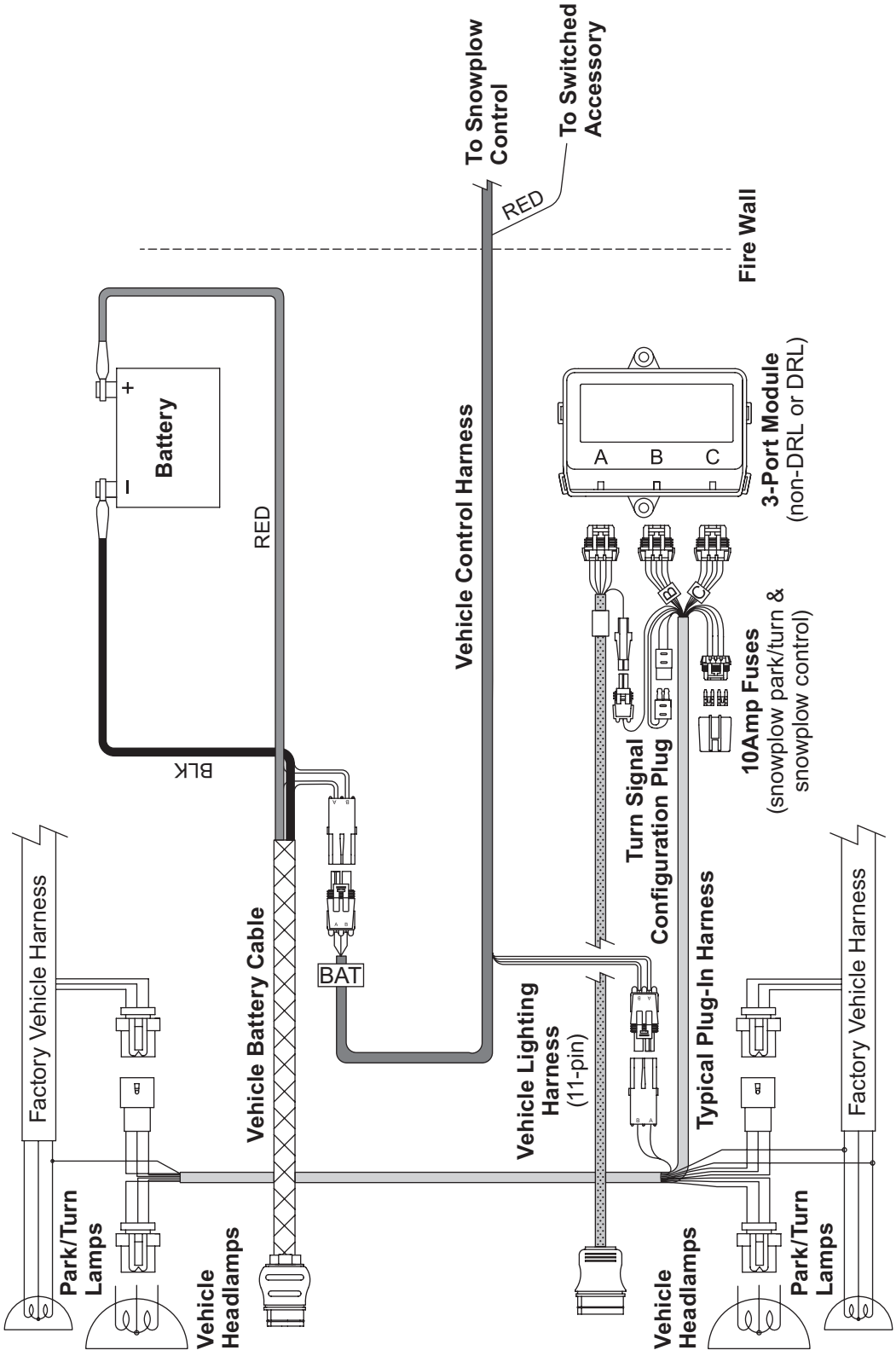

Headlamp Components

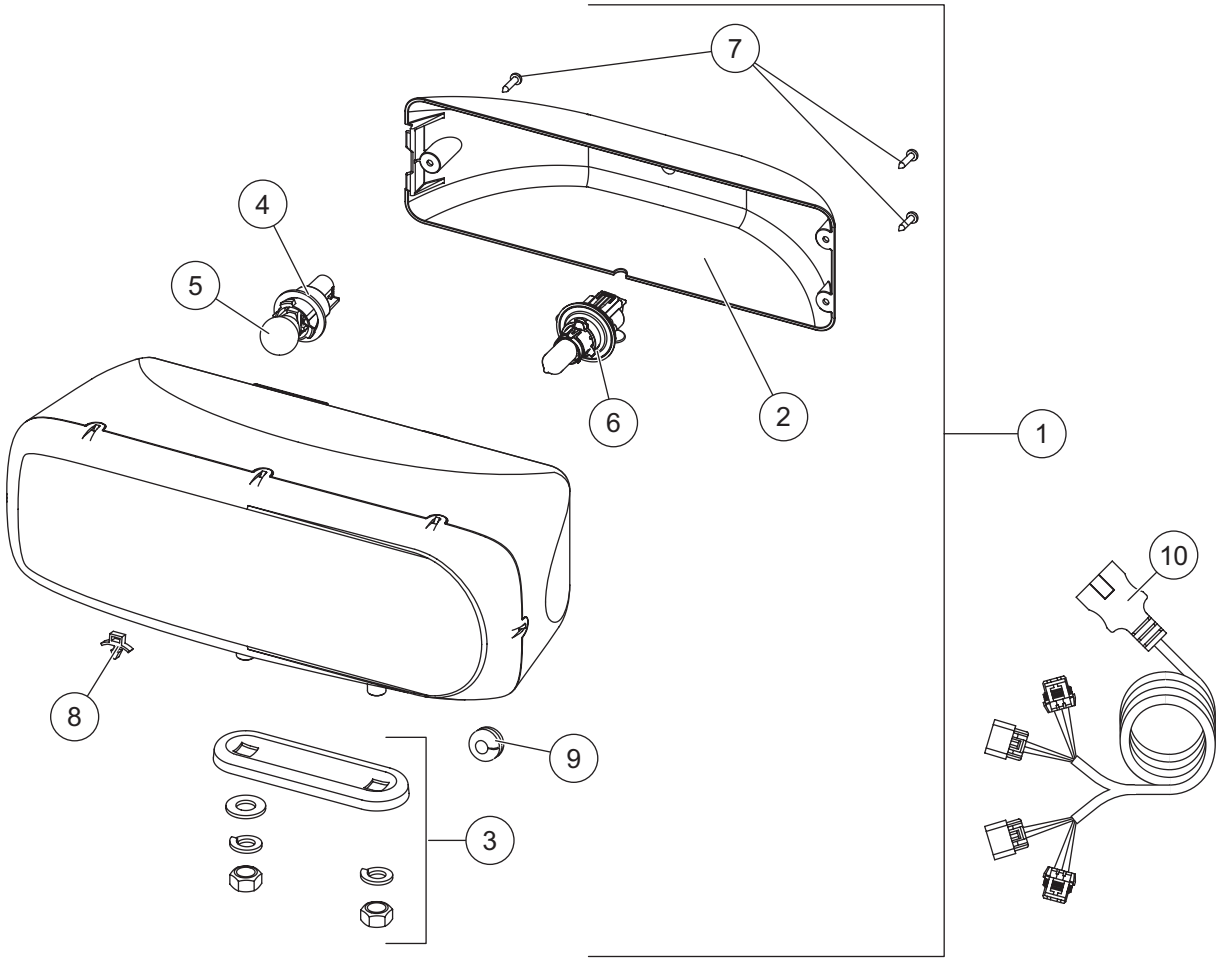

28800-1 Headlamp Kit (pair)							
Item	**Part**	**Qty**	**Description**	**Item**	**Part**	**Qty**	**Description**
1	28802-1	1	Headlamp Service Kit – PS	6	28806	2	Headlamp Bulb Service Kit H13
ns	28801-1	1	Headlamp Service Kit – DS	7	28808-1	2	Cover Screws Service Kit (3 screws)
2	28803-1	2	Rear Cover Kit (fits 2- or 3-screw)	8	56595	6	Cable Anchor Tie
3	28804	2	Mounting Hardware Kit	9	66130	2	Rubber Grommet
4	28805	2	Park/Turn Socket Service Kit	10	28213K	1	Harness Service Kit
5		2	Park/Turn Bulb (trade no. 4157NAK)				
ns = not shown							

TrynEx International, LLC
531 Ajax Drive
Madison Heights, MI 48071-2429
www.snowexproducts.com

A DIVISION OF DOUGLAS DYNAMICS, LLC

Copyright © 2026 Douglas Dynamics, LLC. All rights reserved. This material may not be used, reproduced, or copied in any manner, in whole or in part, in any printed, mechanical, electronic, film, or other distribution and storage media, nor analyzed or manipulated in any manner for the purpose of training artificial intelligence technologies or systems, without the written consent of TrynEx International, LLC. In accordance with Article 4(3) of the Digital Single Market Directive 2019/790, TrynEx International expressly reserves this work from the text and data mining exception. Authorization to photocopy items for internal or personal use by TrynEx International outlets or equipment owner is granted.

TrynEx International reserves the right under its product improvement policy to change construction or design details and furnish equipment when so altered without reference to illustrations or specifications used. TrynEx International or the vehicle manufacturer may require or recommend optional equipment for snow removal. Do not exceed vehicle ratings with a snowplow. TrynEx International offers a limited warranty for all equipment and accessories. See separately printed page for this important information. The following are registered (®) or unregistered (™) trademarks of Douglas Dynamics, LLC: Automatixx®, SECURITY GUARD™, SnowEx®.

Printed in U.S.A.